GEOLIFT

ESW14

ESW16

Load Curve

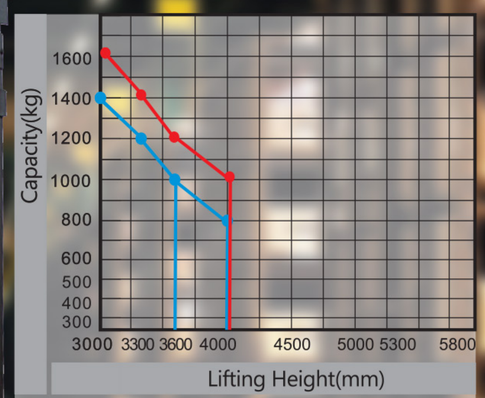

Characteristics

- AC/EPS.
- Automatically speed decelerates while at high lifting position.
- Steering automatic deceleration.
- Forks outside width:200-812mm.
- Option：Lithium battery.

Electric Stacker Walkie Straddle Leg Stacker

Model		ESW14	ESW16
Configuration No.		CTD14-920	CTD16-D920
Type		Straddle	Straddle
Mast type		Standard 2-stage	Standard 2-stage
Loading capacity	kg	1400	1600
Load center	mm	600	600
Operating type		Walkie/Rider	Walkie/Rider
Wheels type		PU	PU
Wheel quantity Driving wheel/ Balance wheel/Bearing wheel		1/2/4	1/2/4
lift height	mm	1400/2000/2500/3000/ 3300/3600/4000	1400/2000/2500/3000/ 3300/3600/4000
Max.extend height	mm	1900/2500/3000/3500/ 3800/4100/4500	1900/2500/3000/3500/ 3800/4100/4500
Mast lowered height	mm	1185/1535/1765/1980/ 2135/2335/2500	1185/1535/1765/1980/ 2135/2335/2500
Fork size(length/width/thinkness)	mm	1070/100/40	1070/100/40
Overall length	mm	2005/2425	2005/2425
Overall width	mm	1470	1470
Min.Turning radius	mm	1565/1975	1565/1975
Min.Aisle width for pallets 1000×1200	mm	2260/2585	2260/2585
Min.ground cleaarance	mm	50	50
Travel speed,laden/unladed	km/h	6/6	6/6
Lift speed,laden/unladed	mm/s	130/180	130/180
Gradeability,laden/unladed	%	6/8	6/8
Driving motor/Lift motor/Steering motor	kW	AC1.5/DC3/DC0.15	AC1.5/DC3/DC0.15
Battery voltage/capacity	V/Ah	24/280	24/280
Brake		Electromagnetic/Regenerative	Electromagnetic/Regenerative
Controller		ZAPI	ZAPI
Battery weight	kg	235	235
Service weight with battery	kg	1276	1336

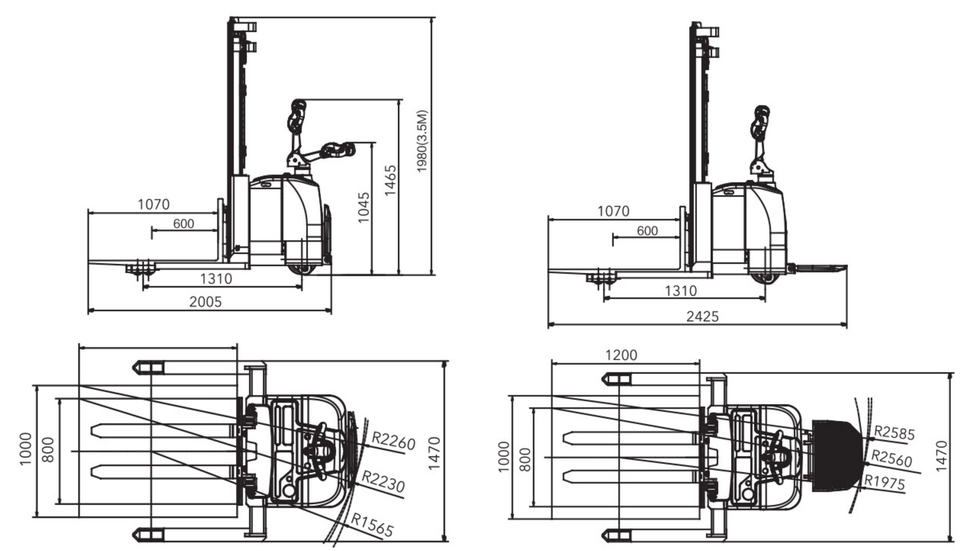

www.geolift.com.my